TWEETER D2604/832002

The LIMITED EDITION tweeter, are based on well known designs from our Discovery line, optimized and improved with technology features normally only seen in very exclusive tweeters, allowing you to build outstanding loudspeakers at rasonable pricing.

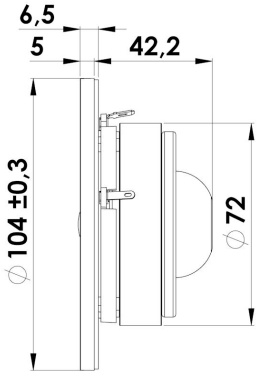

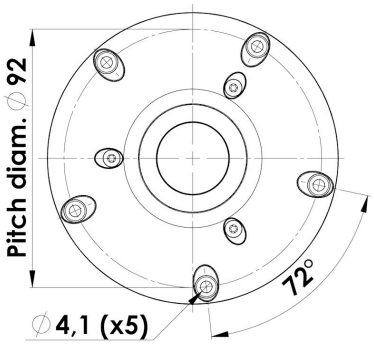

KEY FEATURES:

- Textile dome tweeter, wide surround
- Ferrite magnet system with copper cap
- Rear chamber for optimized low end extesion
- Voice coil with CCAW wire and Titanium bobbin
- Painted die cast Aluminum face plate
- Optimized internal airflow and dampening

T-S Parameters	
Resonance frequency [fs]	500 Hz
Mechanical Q factor [Qms]	2.43
Electrical Q factor [Qes]	0.58
Total Q factor [Qts]	0.47
Force factor [Bl]	2.7 Tm
Mechanical resistance [Rms]	0.59 kg/s
Moving mass [Mms]	0.5 g
Compliance [Cms]	0.2 mm/N
Effective diaph. diameter [D]	30 mm
Effective piston area [Sd]	7 cm²
Equivalent volume [Vas]	- l
Sensitivity (2.83V/1m)	91.5 dB
Ratio Bl/√Re	1.6 N/√W
Ratio fs/Qts	1064 Hz

Notes:
IEC specs. refer to IEC 60268-5 third edition.
All Scan-Speak products are RoHS compliant.
Data are subject to change without notice.
Datasheet updated: September 14, 2016

Electrical Data	
Nominal impedance [Zn]	4 Ω
Minimum impedance [Zmin]	3.5 Ω
Maximum impedance [Zo]	13.5 Ω
DC resistance [Re]	2.9 Ω
Voice coil inductance [Le]	0.02 mH

Power Handling	
100h RMS noise test (IEC 17.1)	100 W
Long-term max power (IEC 17.3)	240 W

Voice Coil & Magnet Data	
Voice coil diameter	26 mm
Voice coil height	2.3 mm
Voice coil layers	2
Height of gap	2.5 mm
Linear excursion	± 0.1 mm
Max mech. excursion	± 1.6 mm
Unit weight	0.55 kg

SCANSPEAK
N.C. Madsensvej 1 · 6920 Videbæk · Denmark · Phone: +45 6040 5200 · www.scan-speak.dk

SCANSPEAK

TWEETER D2604/832002

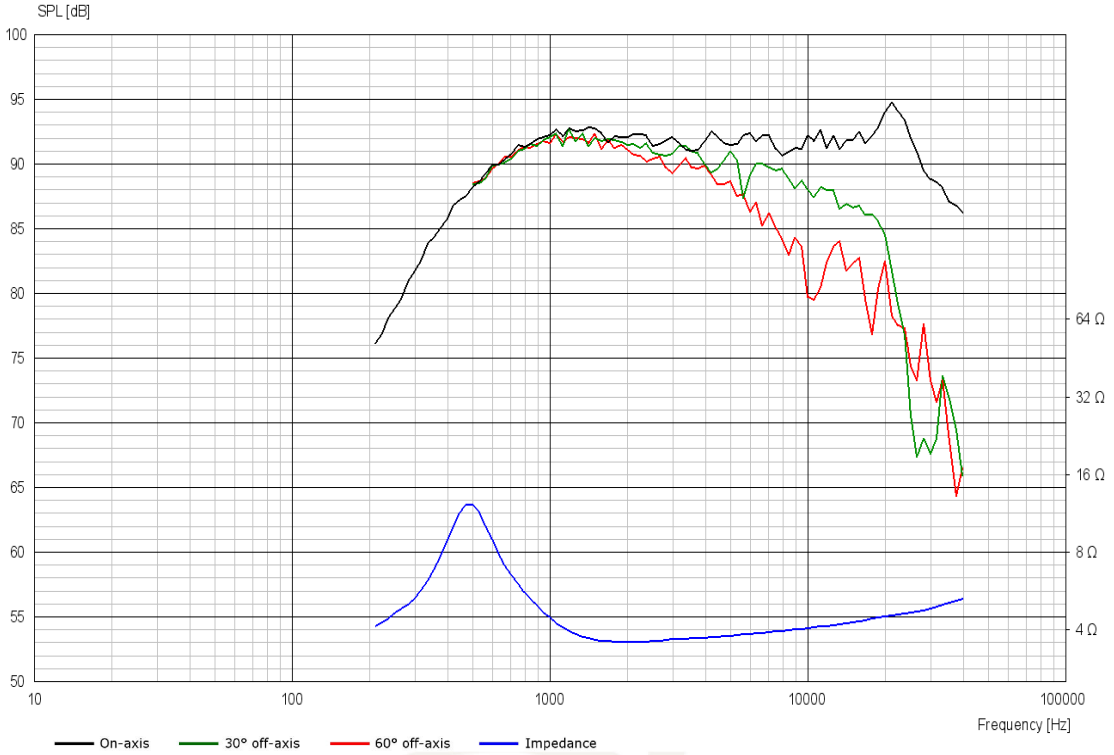

Advanced Parameters (Preliminary)

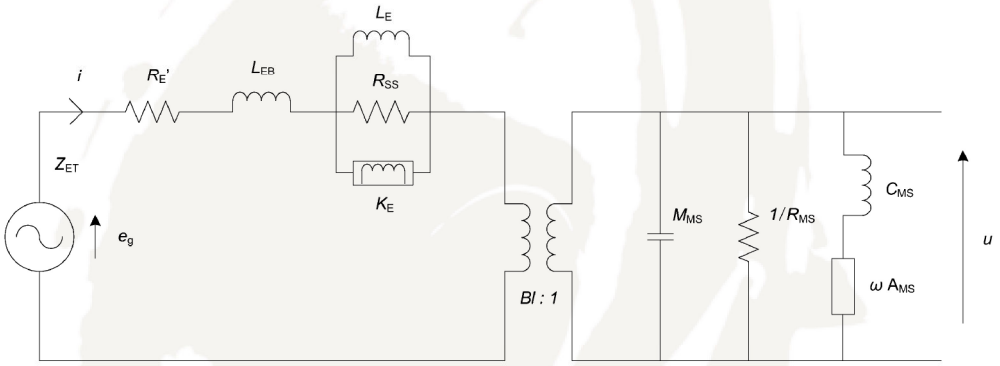

Electrical data	
Resistance [Re']	Ω
Free inductance [Leb]	mH
Bound inductance [Le]	mH
Semi-inductance [Ke]	SH
Shunt resistance [Rss]	Ω

Mechanical Data	
Force Factor [Bl]	Tm
Moving mass [Mms]	g
Compliance [Cms]	mm/N
Mechanical resistance [Rms]	kg/s
Admittance [Ams]	mm/N

SCANSPEAK
N.C. Madsensvej 1 · 6920 Videbæk · Denmark · Phone: +45 6040 5200 · www.scan-speak.dk