MODEL : RT-4001

TYPE : Tweeter driver

FEATURES

- Air motion transformer (AMT)
- Linear impedance curve
- Minimal phase shift
- Folded Kapton ribbon diaphragm

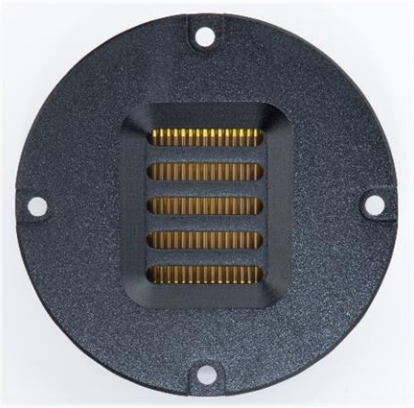

DIMENSIONS

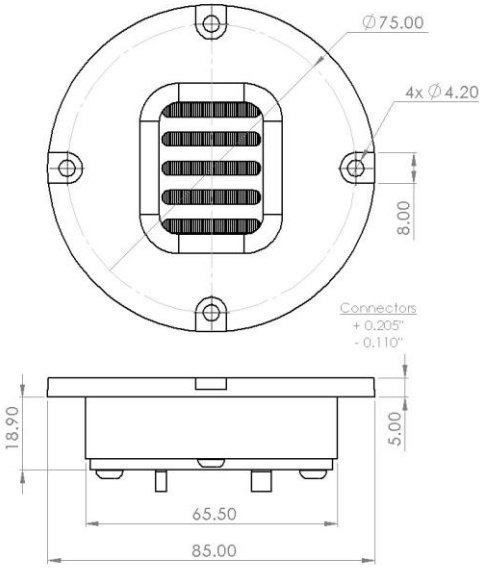

IMPEDANCE & PHASE

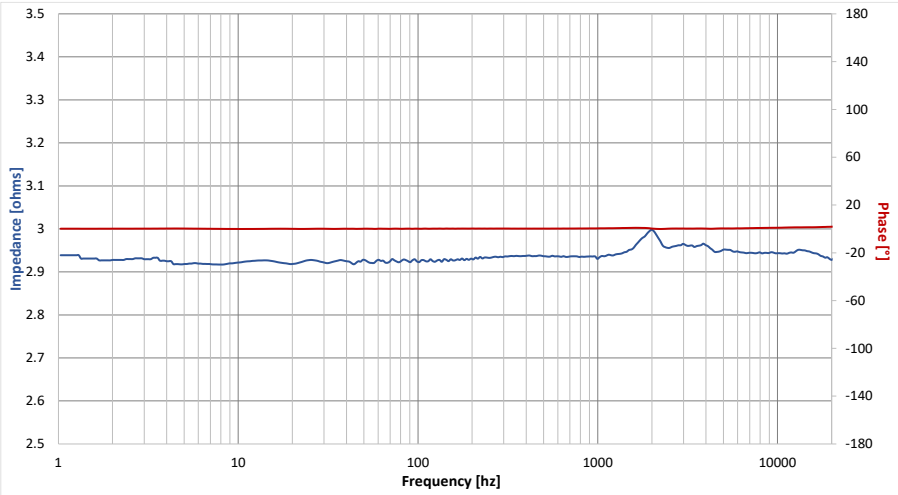

Note: The impedance and phase are measured in free air using a DATS V3.

PARAMETERS

Fs	2005 Hz
Impedance	4 ohms
Re	2.92 ohms
Qms	N/A
Qes	N/A
Qts	N/A
Vas	N/A
Le	N/A
SPL	89.0 dB @ 2.83V/1m
Mms	N/A
Cms	N/A
BL	N/A
Xmax	N/A
RMS Power Handling	20 W
Sd	9.25 cm^2
Usable Frequency Range	2,500 - 23,000 Hz

Note : T/S Parameters measured on drive units that are broken in.

FREQUENCY RESPONSE

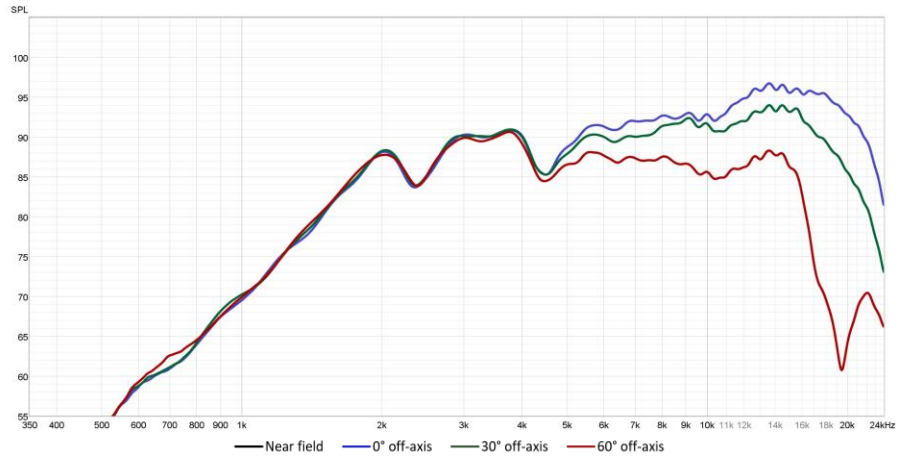

Note: The frequency responses above show SPL in 0° (blue), 30° (green) and 60° (red) angle mounted on a 1.66 x 1.35 m baffle in free air. Microphone at 0.5 m, SPL normalized to 1 m and input at 2.83 V_{RMS}. Impulse response limited to 3 ms and 1/24 smoothing applied.