SB ACOUSTICS

8" SB20PFC30-4-R

Prototype data

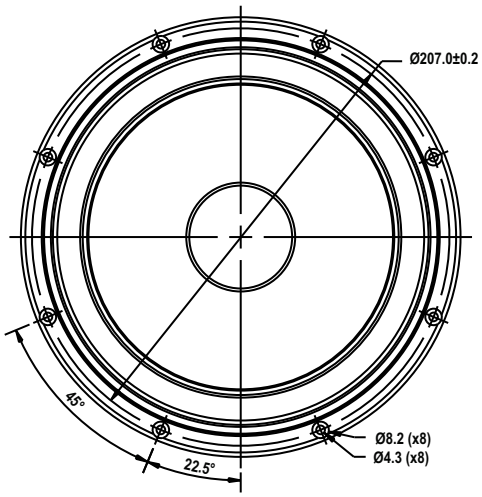

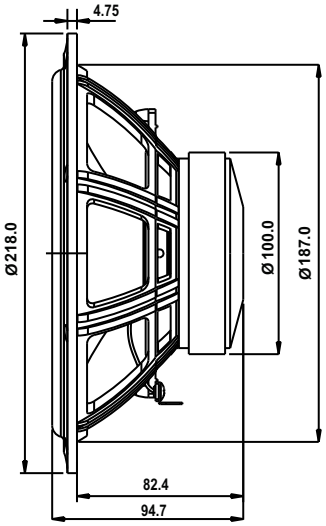

FEATURES

- Vented reinforced plastic chassis
- Proprietary cone material with natural fibers made in-house
- Soft low damping rubber surround for improved transient response
- Large spider for improved linearity
- Optimized motor system
- Vented coil former for low compression
- Non-resonant long life lead wires

Specs :

Nominal Impedance	4 Ω	Free air resonance, Fs	34 Hz
DC resistance, Re	3.4 Ω	Sensitivity (2.83 V / 1 m)	92.5 dB
Voice coil inductance, Le	0.71 mH	Mechanical Q-factor, Qms	2.78
Effective piston area, Sd	216 cm^2	Electrical Q-factor, Qes	0.37
Voice coil diameter	30.5 mm	Total Q-factor, Qts	0.33
Voice coil height	16.5 mm	Moving mass incl.air, Mms	22.4 g
Air gap height	5 mm	Force factor, Bl	6.6 Tm
Linear coil travel (p-p)	11.5 mm	Equivalent volume, Vas	66.2 liters
Magnetic flux density	1.2 T	Compliance, Cms	1.0 mm/N
Magnet weight	0.54 kg	Mechanical loss, Rms	1.7 kg/s
Net weight	1.42 kg	Rated power handling*	50 W

* IEC 268-5, T/S parameters measured on drive units that are broken in.

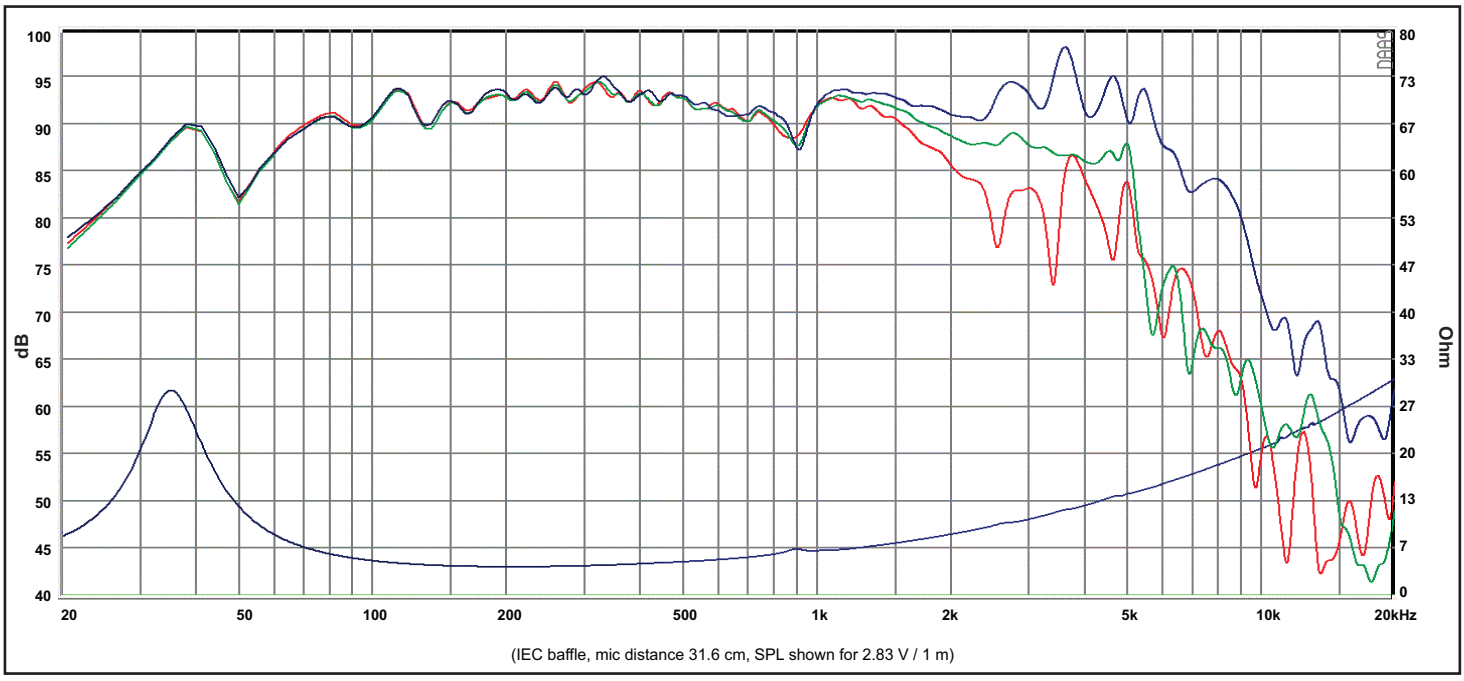

Response Curve :

(Blue) : on axis (Green) : 30° off-axis (Red) : 60° off-axis

REV.0 (20.04.2018)