M4N

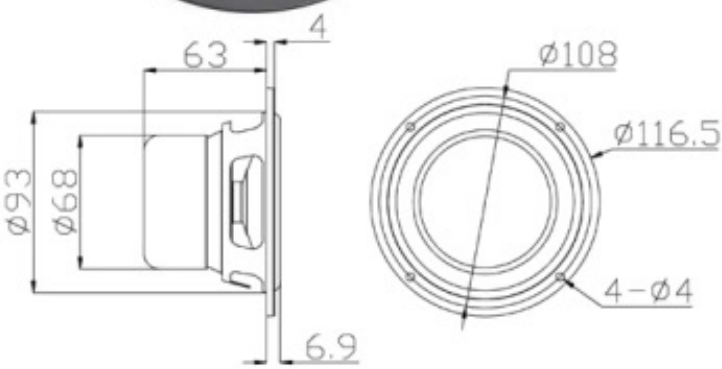
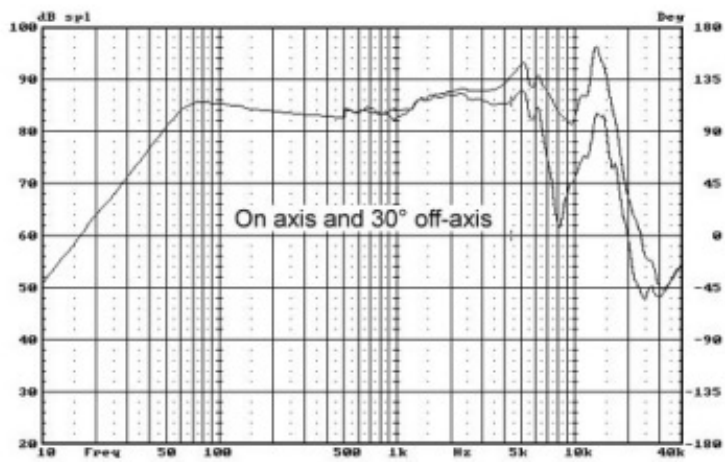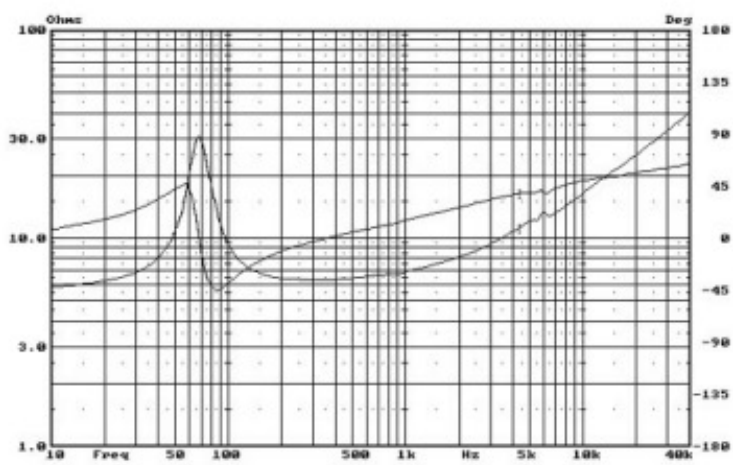
M4N	
Nominal Impedance (Z)(Ω) :	8
Resonance Frequency (Fs)(Hz) :	69
Nominal Power Handling (Pnom)(W) :	15
Sensitivity (2.83v/1m)(dB) :	82
Weight (M)(Kg) :	0.60
VC Diameter (mm) :	20 CCAW
DC (Re)(Ω) :	6.5
VC Length (H)(mm) :	9.0
VC Former :	Kapton
VC Layers :	2
Magnet System :	Shielded Ferrite
Force Factor (BL)(TM) :	3.1
Gap Height (He)(mm) :	3.0
Linear Excursion (Xmax)(mm) :	3.0
Suspension Compliance (Cms)(uM/N) :	1080
Mechanical Q (Qms) :	5.39
Electrical Q (Qes) :	1.35
Total Q (Qts) :	1.08
Moving Mass (Mms)(g) :	4.8
Effective Piston Area (Sd)(m2) :	0.0053
Equivalent Air Volume (Vas)(L) :	4.3
Sealed Box :	Vb=4L
:	F-3=70Hz