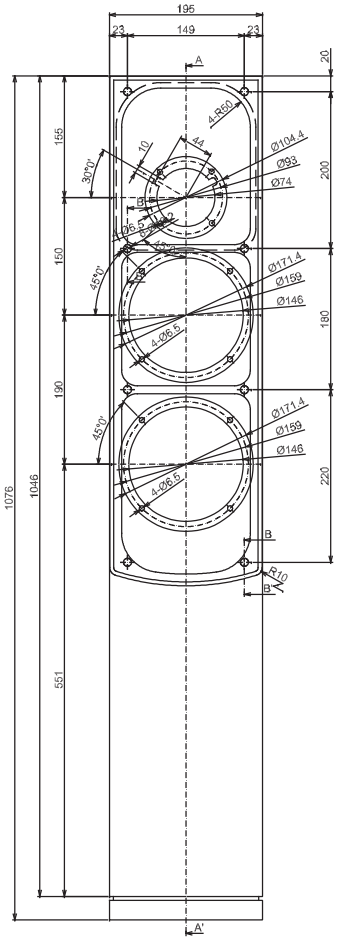
195
23
149
23
20
A
4-R50
Ø104.4
Ø93
Ø74
30°0'
10
44
155
200
150
45°0'
Ø171.4
Ø159
Ø146
4-Ø6.5
190
190
45°0'
Ø171.4
Ø159
Ø146
4-Ø6.5
220
1076
1046
551
B
R10
A'

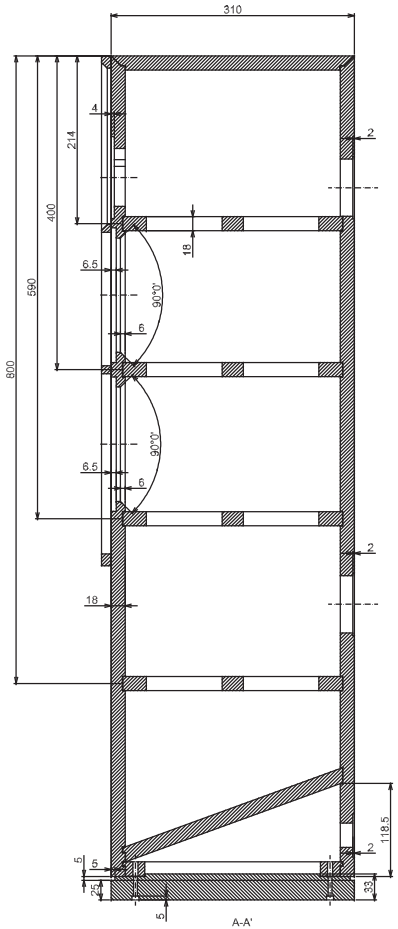
310
4
214
400
590
800
18
6.5
90°0'
6
6.5
90°0'
6
18
2
2
118.5
5
5
25
33
5
A-A'

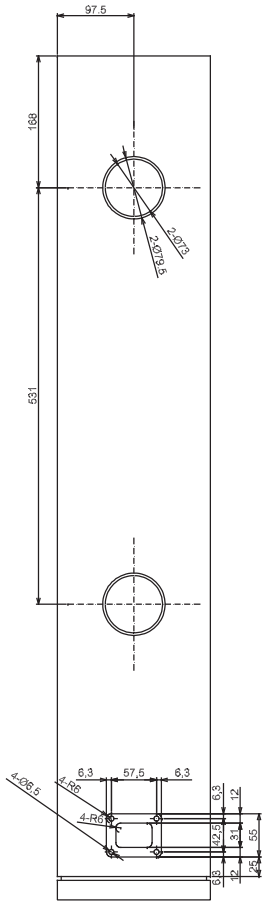
97.5
168
2-Ø73
2-Ø79.5
531
4-Ø6.5
4-R6
6.3
57.5
6.3
4-R6
6.3
12
142.5
31
55
6.8
12
5

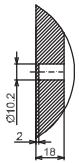
Ø10.2
2
18
B-B'

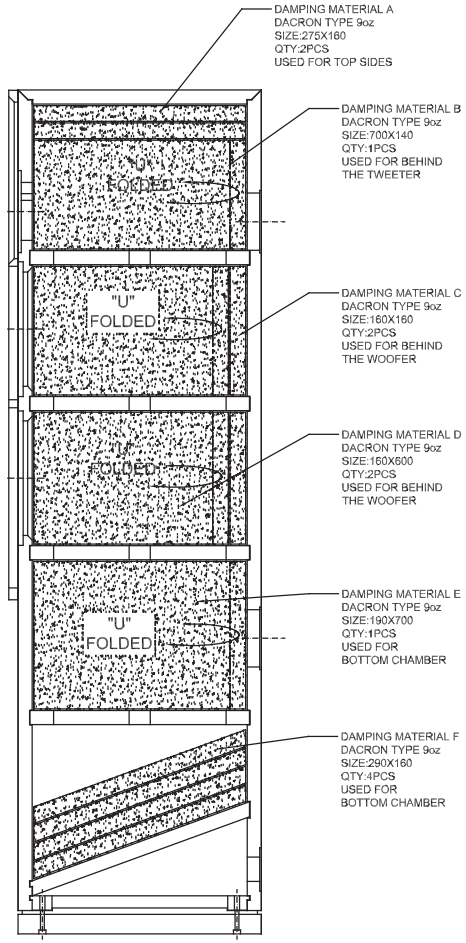
DAMPING MATERIAL A
DACRON TYPE 9oz
SIZE:275X160
QTY:2PCS
USED FOR TOP SIDES
DAMPING MATERIAL B
DACRON TYPE 9oz
SIZE:700X140
QTY:1PCS
USED FOR BEHIND
THE TWEETER
"U"
FOLDED
DAMPING MATERIAL C
DACRON TYPE 9oz
SIZE:160X160
QTY:2PCS
USED FOR BEHIND
THE WOOFER
"U"
FOLDED
DAMPING MATERIAL D
DACRON TYPE 9oz
SIZE:160X600
QTY:2PCS
USED FOR BEHIND
THE WOOFER
"U"
FOLDED
DAMPING MATERIAL E
DACRON TYPE 9oz
SIZE:190X700
QTY:1PCS
USED FOR
BOTTOM CHAMBER
DAMPING MATERIAL F
DACRON TYPE 9oz
SIZE:290X160
QTY:4PCS
USED FOR
BOTTOM CHAMBER

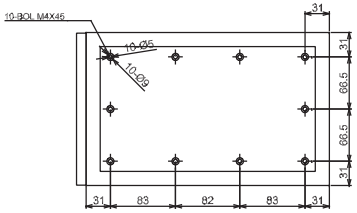
10-BOL M4X46
10-Ø5
10-Ø9
31
31
66.5
66.5
31
31
83
82
83
31